ALUPROFF 560 BRACKETS

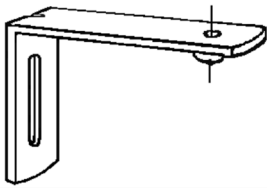

560 BRACKETS

SPECIFICATIONS

- **Use:** As wall bracket with plastic or metal bracket
- **Length:** From 3 cm to 24 cm
- **Material:** Steel
- **Colours**: White, Super Silver, gold (anodized)

All NCS & standard RAL colours available per request at additional cost.

COVERS

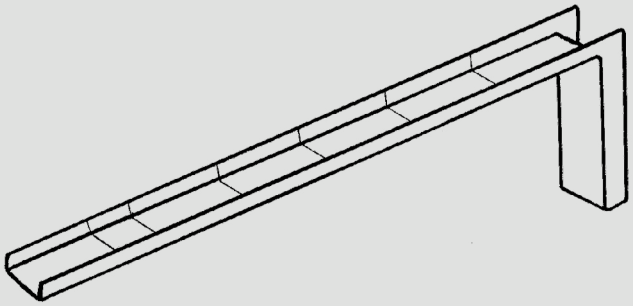

PLASTIC COVER AVAILABLE IN:

WHITE BLACK ANTHRACITE SILVER CREAM BROWN GOLD

COASTAL BLUE LTD. ED. GREEN LEAF LTD. ED.

COLOURS

WHITE SUPER SILVER GOLD

BRACKETS

560-03 Bracket 3 cm (40 x 27 mm) Quantity: 25 pcs	560-05 Bracket 5 cm (40 x 47 mm) Quantity: 25 pcs	560-07 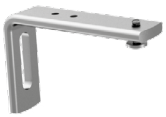 Bracket 7 cm (40 x 67 mm) Quantity: 25 pcs	560-09 Bracket 9 cm (40 x 87 mm) Quantity: 25 pcs
560-12 Bracket 12 cm (40 x 117 mm) Quantity: 25 pcs	560-14 Bracket 14 cm (40 x 137 mm) Quantity: 25 pcs	560-16 Bracket 16 cm (40 x 157 mm) Quantity: 25 pcs	560-19 Bracket 19 cm (40 x 197 mm) Quantity: 25 pcs
560-24 Bracket 24 cm (40 x 237 mm) Quantity: 25 pcs	560D Plastic cover for 560 brackets - 13 cm Quantity: 50 pcs		